Clarke®

POWER



7.9KVA DIESEL GENERATOR

MODEL NO: DG8000ADVES

PART NO: 8857862

OPERATION & MAINTENANCE INSTRUCTIONS

UK CA | CE

DL0226

INTRODUCTION

Thank you for purchasing this CLARKE 7.9kVA Diesel Generator.

Before attempting to use this product, please read this manual thoroughly and follow the instructions carefully. In doing so you will ensure the safety of yourself and that of others around you, and you can look forward to your purchase giving you long and satisfactory service.

GUARANTEE

This product is guaranteed against faulty manufacture for a period of 12 months from the date of purchase. Please keep your receipt which will be required as proof of purchase.

This guarantee is invalid if the product is found to have been abused or tampered with in any way, or not used for the purpose for which it was intended.

Faulty goods should be returned to their place of purchase, no product can be returned to us without prior permission.

This guarantee does not effect your statutory rights.

ENVIRONMENTAL RECYCLING POLICY



Through purchase of this product, the customer is taking on the obligation to deal with the WEEE in accordance with the WEEE regulations in relation to the treatment, recycling & recovery and environmentally sound disposal of the WEEE.

In effect, this means that this product must not be disposed of with general household waste. It must be disposed of according to the laws governing Waste Electrical and Electronic Equipment (WEEE) at a recognised disposal facility.

SPECIFICATIONS

Engine	Engine Model/Type	D500XE/Diesel
	Power/Displacement	11HP-8kW/498cc
	RPM	3000
	Ignition type	Compression
	Fuel tank capacity (L)	15 (Safe Capacity)
	Fuel consumption at 3/4 Load (L/h)	Approx. 1.86
	Maximum run time at 3/4 load (h)	Approx. 8
	Engine oil type/capacity (L)	SAE15W-40/1.75
	Emissions (g/kWh) CO/HC/NOx	1.72/0.96/5.71
	Sound pressure level (LpA dB)	74
	Sound power level (LwA dB)	94
	Guaranteed sound power (LwA dB)	97
	Uncertainty factor (K dB)	2.8
Generator	Rated Frequency (Hz)	50
	Rated AC Voltage per socket x 1 (V)	230 (1 x 32A)
	Rated AC Voltage per socket x 1 (V)	400 (1 x 16A)
	Rated Output Power (W) (230V/400V)	5.4kW/7.5kVA
	Max Rated Output Power (W) (230V/400V)	5.7kW/7.9kVA
	Rated Output Current (A) (230V/400V)	23.4A/10.8A
	Max Rated Output Current (A) (230V/400V)	24.7A/11.4A
	Trip Amps	33A
	Starter Type	Key, Auto & ATS
	Operating Temperatures	-5°C to 40°C (23°F to 104°F)
	IP Rating	IP23
Dimensions	Length x Width x Height (mm)	920 x 520 x 720
	Unpacked & Unfueled Weight (kg)	166

GENERAL SAFETY RULES



WARNING: EXHAUST FUMES CAN BE EXTREMELY DANGEROUS IF INHALED

WORK AREA

1. **ALWAYS** use in a well ventilated area.
2. **ALWAYS** position the exhaust outlet away from people.
3. **NEVER** use indoors or in a confined space.
4. **ALWAYS** read these safety instructions before using the equipment.
5. **ALWAYS** keep children away from the generator.

FIRE PREVENTION

1. **ALWAYS** switch the engine OFF when refuelling.
2. **ALWAYS** refuel away from any source of heat.
3. **ALWAYS** refuel in a well ventilated area.
4. Only use standard diesel. **DO NOT** mix oil in with the diesel.
5. **NEVER** overfill the fuel tank, fill to the level specified, see page 10-11.
6. **NEVER** smoke whilst refuelling and avoid smoking or using a naked flame near the generator.
7. **NEVER** start the engine if there is spilled fuel. Any spillage must be wiped clean and the generator allowed to dry before attempting to start the engine.

PREVENTION OF ELECTRIC SHOCK

1. **NEVER** use the generator in wet conditions unless it is well protected/covered. Under these conditions, adequate ventilation MUST be provided.
2. **NEVER** operate the generator with wet hands.
3. **NEVER** use water or any other liquids to clean the generator.

ADDITIONAL SAFETY RULES FOR GENERATORS

1. **ALWAYS** ensure the applied load does not exceed the generator rating. Overloading the generator is dangerous and could cause serious damage.
2. **ALWAYS** disconnect and turn off the generator when carrying out any maintenance.

3. **ALWAYS** ensure the generator reaches operating speed before connecting a load.
4. **NEVER** allow the generator to run out of fuel when a load is connected.
5. **NEVER** transport the generator with fuel in the tank.
6. **DO NOT** connect to a commercial or residential power supply; e.g. ring main unless you are using the appropriate ATS system. Always seek professional advice to install an ATS system.
7. **NEVER** allow the generator air vents to become blocked.

POSITIONING THE GENERATOR

1. **ALWAYS** leave a least a 1.5m gap between the generator and any surrounding building or structures.
2. **ALWAYS** ensure the generator is on a solid, flat surface.
3. **ALWAYS** ensure the surrounding area is free from any material that could burn or be damaged by heat.
4. **NEVER** move or tilt the generator whilst it is switched on.

GENERATOR LOCATION

WARNING: EXHAUST HEAT/GASES CAN IGNITE COMBUSTIBLES, STRUCTURES OR DAMAGE THE FUEL TANK, CAUSING A FIRE. KEEP AT LEAST 5FT (1.5M) CLEARANCE ON ALL SIDES OF THE GENERATOR INCLUDING OVERHEAD.

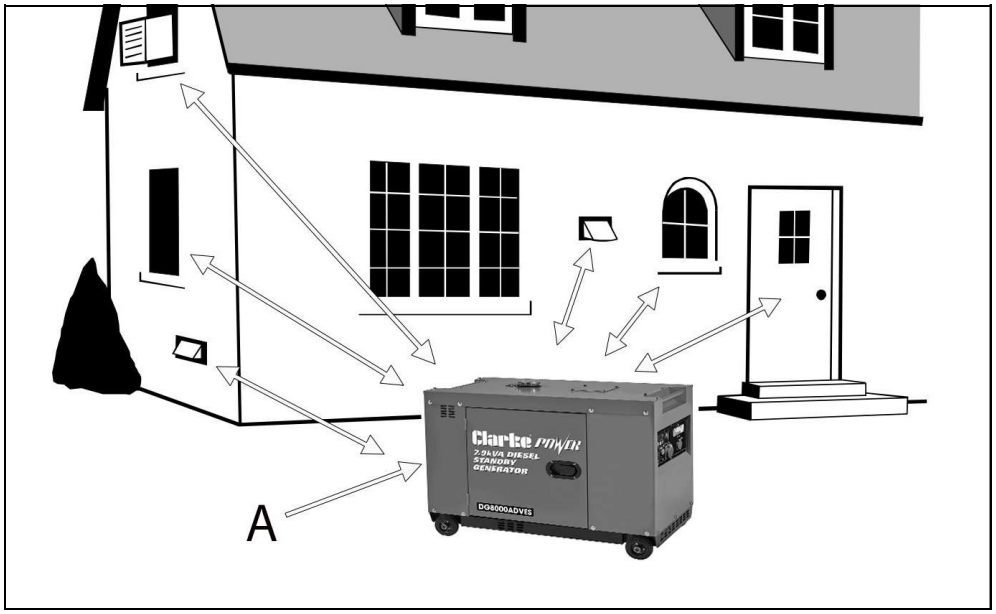

Place the generator in a well ventilated area. This will allow for removal of deadly exhaust gas. **DO NOT** place the generator where exhaust gas could accumulate and enter inside or be drawn into a potentially occupied building. Ensure exhaust gas (A) is kept away from any windows, doors, ventilation intakes, or other openings that can allow exhaust gas to collect in a confined area. Prevailing winds and air currents should be taken into account.

SYMBOLS

	**Caution - Read instruction manual before use**
	**Warning - Dangerous voltage, risk of electrocution**
	**Warning - Flammable**
	**Caution - High noise level when in use**
	**Caution - Wear eye protection when working with engine batteries**
	**Warning - Explosive material**
	**Caution - DO NOT use in wet weather**

	**Warning - Hot Surface, DO NOT touch**
	**Warning - Poisonous fumes - DO NOT use the generator in an enclosed space**
	**Warning - The user should be aware of a general hazard**
	**Warning - Sudden loud noise**
	**Warning - Battery acid, corrosive substance**
	**Caution - DO NOT let children play with generator**

CONTROL PANEL OVERVIEW

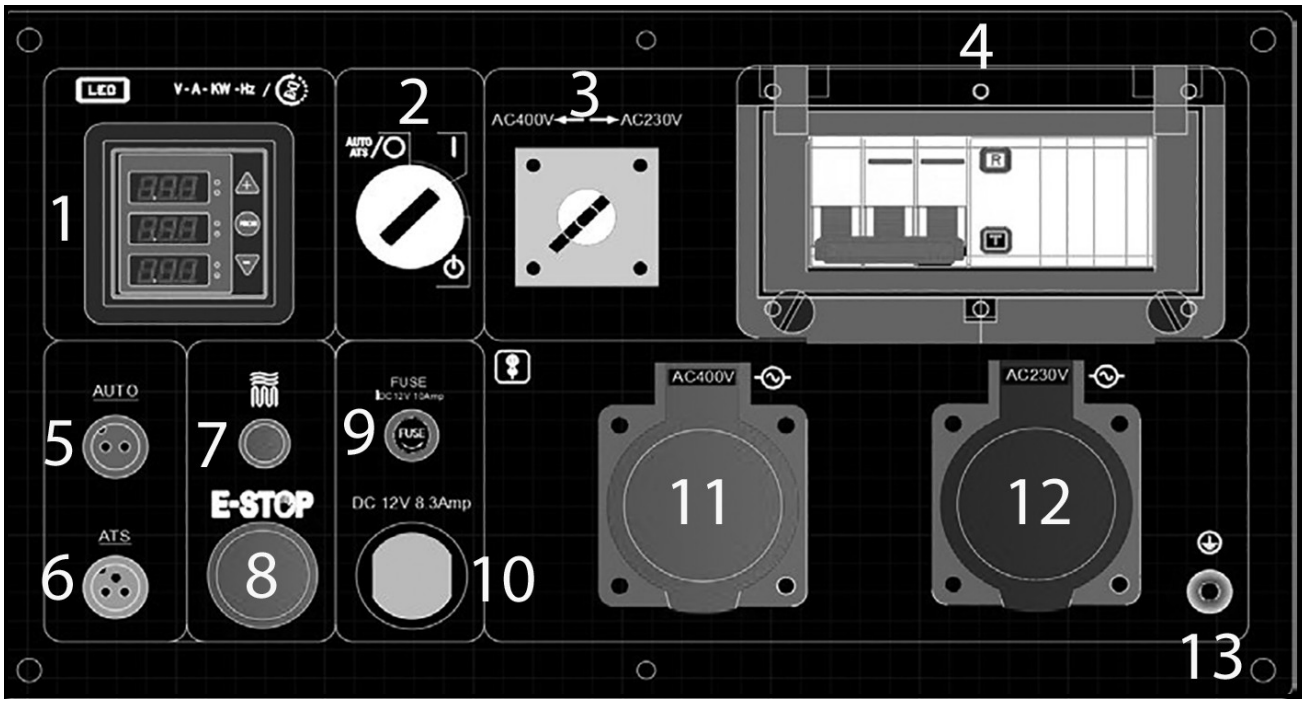

NO	DESCRIPTION	NO	DESCRIPTION
1	LED Display	8	Emergency Stop Button
2	Start Key	9	DC Fuse
3	Transfer Switch (230V - 400V)	10	DC 12V 8.3A
4	Circuit Breakers	11	400V 16A Socket
5	Auto Socket	12	230V 32A Socket
6	ATS (Automatic Transfer Switch) Socket	13	Earthing Terminal
7	Pre-Heater Button		

BEFORE USING THE GENERATOR

Before using your generator check that:

- The generator is in good condition and free from any damage.
- The generator is clean and free from fuel or oil spillage.
- The generator is correctly located for use, see page 5.
- The generator is correctly earthed, see page 9.
- The fuel system is intact and there is no leakage.

NOTE: ALWAYS use a funnel to fill the fuel tank to avoid accidental spillage of fuel. If fuel is spilled it must be cleaned up before use.

WARNING: ENSURE THERE IS ADEQUATE FUEL IN THE TANK WHEN USING THE GENERATOR. RUNNING OUT OF FUEL OR STOPPING THE ENGINE SUDDENLY WITH A LOAD CONNECTED COULD CAUSE SERIOUS DAMAGE.

WARNING: ALWAYS CHECK THE OIL LEVEL BEFORE STARTING SEE PAGES 9-10, FAILURE TO MAINTAIN THE CORRECT OIL LEVEL MAY SERIOUSLY DAMAGE THE ENGINE.

CONNECTING THE BATTERY

For safety reasons, the generator battery is not connected when shipped. Follow these steps to connect the battery.

1. Open the engine compartment door.



2. Connect the negative wire (-, Black) to the negative terminal on the battery as shown.
3. Connect the positive wire (+, Red) to the positive terminal on the battery as shown.
4. Ensure both terminals are covered by the plastic covers.

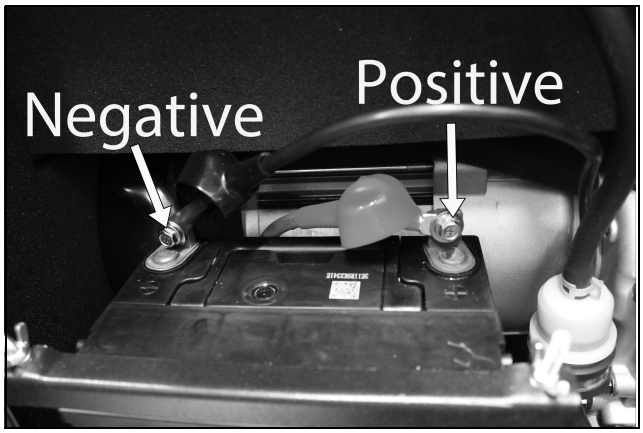

EARTH TERMINAL

WARNING: FAILURE TO PROPERLY GROUND THE GENERATOR BEFORE USE CAN RESULT IN ELECTROCUTION

Attach a suitable earth lead to a good earthing point - water pipe, ground spike etc., whenever you use this generator.

1. Ground the generator by connecting a suitable grounding wire to the earth terminal, as shown, which is located on the control panel.
2. Connect the other end of the grounding wire to a copper or brass grounding rod (not supplied) or suitable grounding point that is driven into the earth.



CHECKING THE ENGINE OIL LEVEL

WARNING: TO CARRY OUT THIS CHECK, PLACE THE GENERATOR ON LEVEL GROUND WITH THE ENGINE SWITCHED OFF.

WARNING: TAKE CARE NOT TO TOUCH ANY HOT PARTS OF THE GENERATOR WHEN CHECKING THE OIL LEVEL.

CAUTION: FOR SAFETY SEASONS, THE GENERATOR IS SHIPPED WITHOUT OIL IN THE ENGINE. DO NOT ATTEMPT TO START THE ENGINE BEFORE FOLLOWING THE BELOW STEPS TO CHECK AND INSTALL ENGINE OIL.

1. Turn the orange dipstick anti-clockwise and remove from the oil fill tube.
2. Wipe the dipstick with a clean cloth.
3. Insert the dipstick back into the oil fill tube and then remove it again. **DO NOT** screw in the dipstick when doing this.

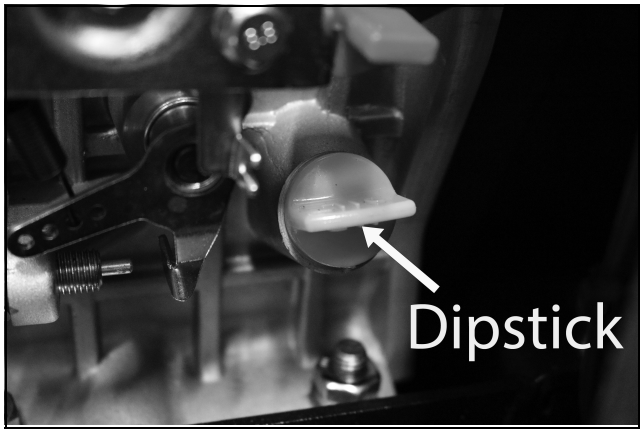

4. If the oil level is at or below the 'L' mark on the dipstick, using a funnel, add oil to the crankcase.
   - Fill until the oil reaches the threads in the oil fill tube.
   - Oil capacity: 1.75 litre.
   - We recommend the use of the following oil: CLARKE SAE15W-40 Motor Oil
5. Replace the oil filler cap/dipstick.

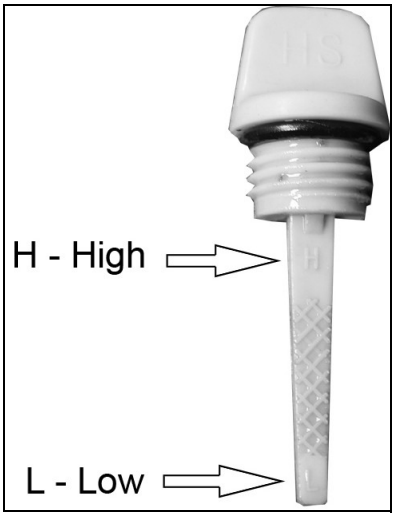

CHECKING THE FUEL LEVEL

WARNING: ALWAYS REFUEL IN A WELL VENTILATED AREA AWAY FROM ANY HEAT SOURCES.

WARNING: ALLOW THE UNIT TO COOL DOWN BEFORE REFUELLING.

WARNING: DO NOT LEAVE FUEL WITHIN THE REACH OF CHILDREN.

For safety seasons, the generator is shipped without diesel in the tank. Follow these steps to check and install diesel.

RECOMMENDED FUEL

Only use standard diesel. DO NOT mix oil with the diesel.

1. Check the fuel level on the fuel gauge. The fuel gauge will show as red when you have fuel in the tank turning white as the fuel level decreases.

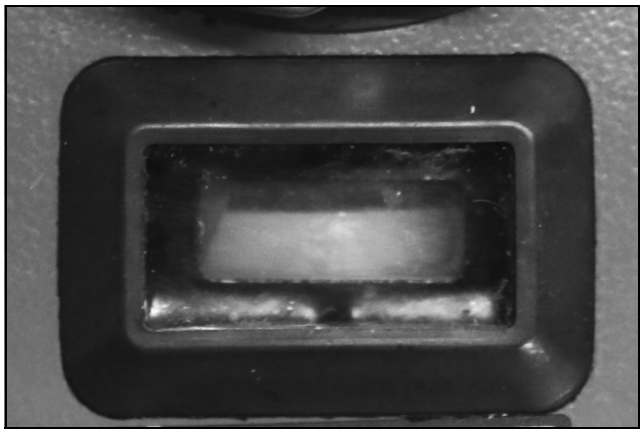

2. To add fuel (Diesel, B7), open the fuel filler cap.

   NOTE: If you mistakenly fill the tank with petrol, **DO NOT start the generator.** Contact a CLARK authorised dealer or service centre about draining the fuel tank and system before using the generator again.



3. Just inside the fuel tank is a fuel filter which catches any contaminants as you refuel.
4. Slowly add fuel to the fuel tank (maximum safe fill level: 15 Litres) watching the fuel level gauge as you do so.

   NOTE: DO NOT overfill the fuel tank.

5. Replace the fuel filler cap securely.

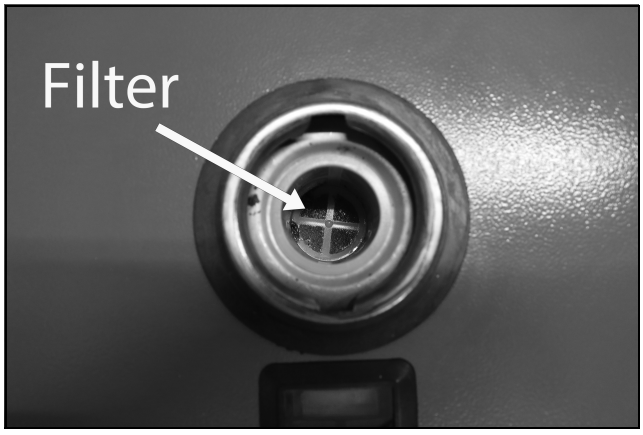

USING YOUR GENERATOR

STARTING THE ENGINE

1. Remove all connections from the AC sockets.
2. Switch the Circuit Breaker to the 'OFF/DOWN' position.

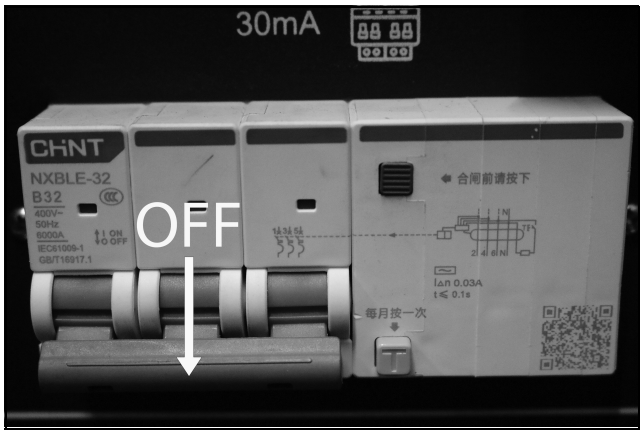

3. Choose which voltage is needed by turning the Transfer Switch to either 230V or 400V.



4. Turn the Start Key clockwise to the start position and hold for 5 seconds, the engine should start.

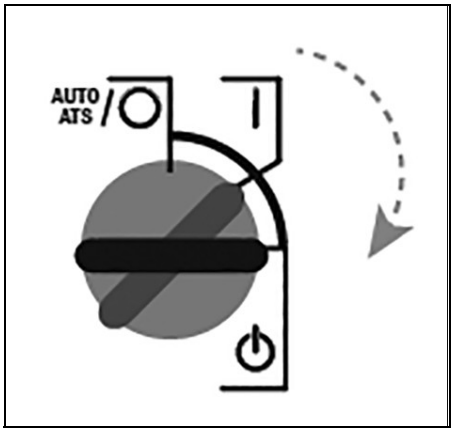

5. Connect the relevant electrical device to either the 32A, 230V or 16A, 400V socket.
6. Switch the Circuit Breaker to the 'ON/ UP' position.

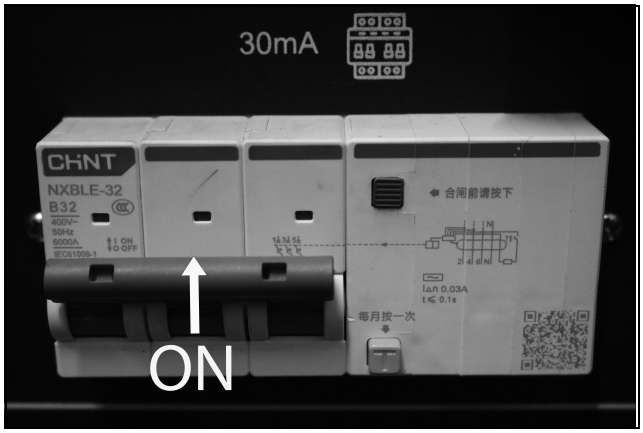

ATS AND AUTO START

This generator has the capacity to Auto and/or Automatic Transfer Switch (ATS) start. Connections for these start systems are **NOT** supplied with this generator.

WARNING: AUTO AND ATS SYSTEM SHOULD ALWAYS BE SET UP AND INSTALLED BY A FULLY QUALIFIED ELECTRICIAN.

1. Remove all connections from the AC sockets.
2. Switch the Circuit Breaker to the 'OFF/DOWN' position.

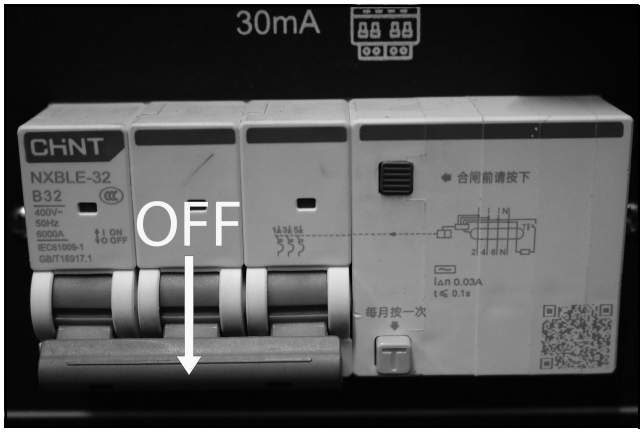

3. Turn the Start Key anti-clockwise to the Auto/ATS position.

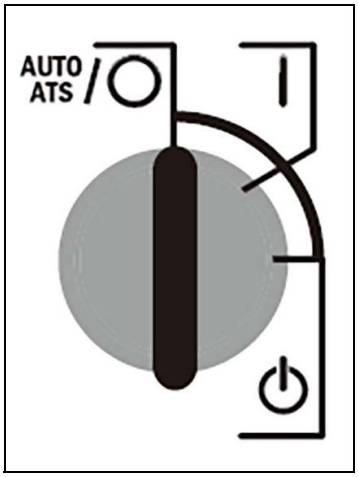

4. Choose which voltage is needed by turning the Transfer Switch to either 230V or 400V.



5. Attach the Auto/ATS connection cable to the appropriate socket on the control panel.

   NOTE: Connections/Cables for these start systems are **NOT** supplied with this generator.

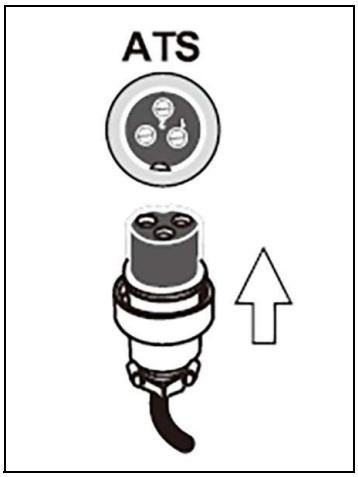

6. Connect the relevant electrical device to either the 32A, 230V or 16A, 400V socket.
7. Switch the Circuit Breaker to the 'ON/ UP' position.

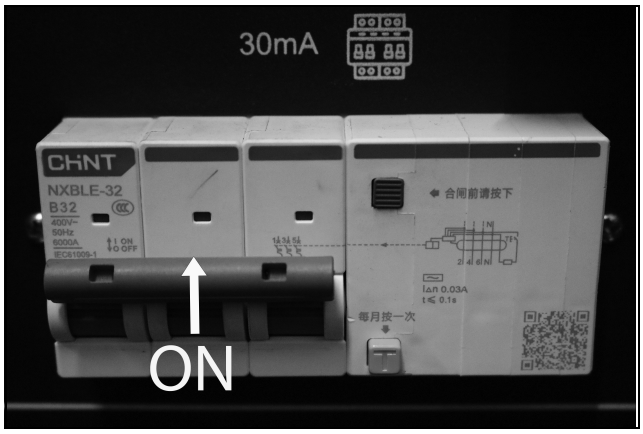

CONNECTING ELECTRICAL DEVICES

The generator can supply both 230V AC and 400V AC, but **NOT** at the same time.

The sockets are laid out in the following order: (from left to right):

1. 1 x 16amp 400v (Red Socket)
2. 1 x 32amp 230v (Blue Socket)
3. 1 x 8.3amp 12V (DC, cigarette lighter socket)

Follow the steps below to properly connect your device(s) to the generator.

1. Before connecting electrical devices, allow the generator to run for a few minutes to stabilise the speed and voltage output.
2. Select the device and make sure it is turned off. Plug the device into the generator and then turn the device on. Allow the engine to stabilise.
3. **DO NOT** attempt to plug in and start 230V & 400V devices at the same time.

MAIN AC BREAKER

The Main AC Circuit Breaker will activate (switch to the 'OFF' position) if the generator or circuit is overloaded. If the Main AC Breaker activates or any of the smaller individual circuit breakers.

1. Remove any connected devices from the generator.
2. Wait for a few minutes.

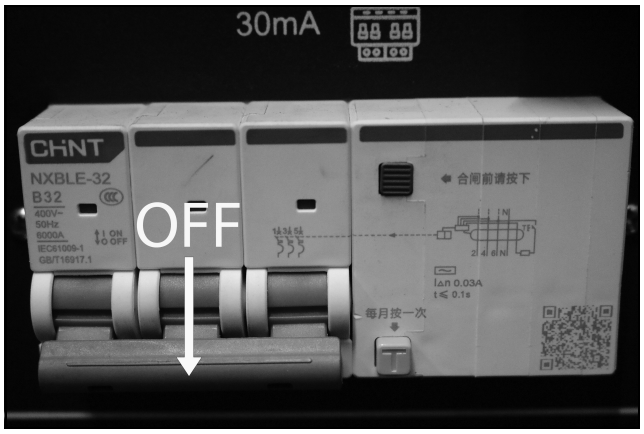

3. Restart the generator (see pages 12-13).
4. Reconnect the devices to the generator, making sure you do not exceed the maximum capacity of the generator (see page 3).

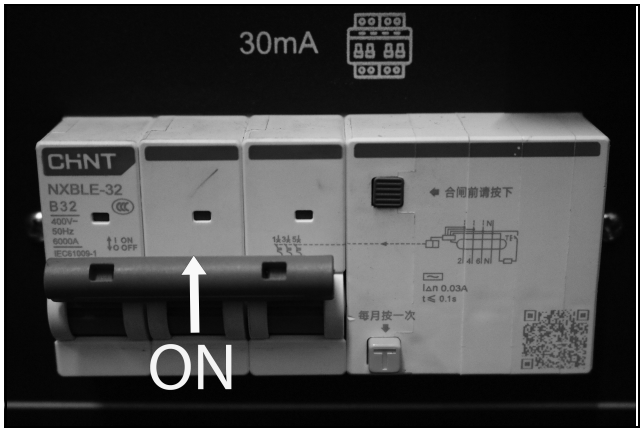

CAUTION: MAKE SURE THAT THE APPLIANCE BEING CONNECTED IS IN GOOD WORKING ORDER, IF IT BEGINS TO ACT ABNORMALLY OR STOPS SUDDENLY, DISCONNECT IT FROM THE GENERATOR

SHUTTING DOWN THE GENERATOR

1. Make sure that the AC breaker is set to the 'OFF/DOWN' position.

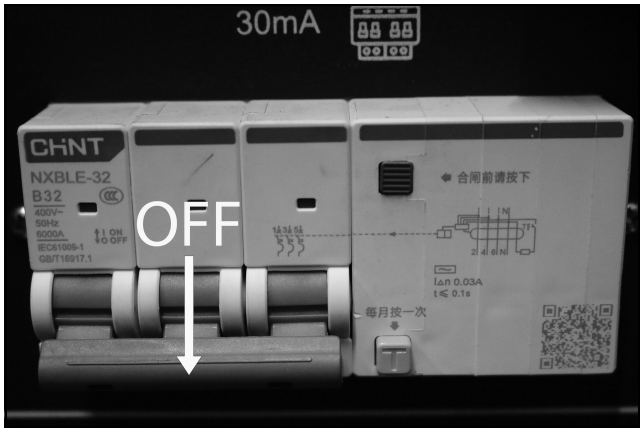

2. Disconnect all electrical devices.
3. Let the engine run for 2-3 minutes so it stabilises.
4. Turn the Start Knob anti-clockwise to the 'OFF -Auto/ATS' position.

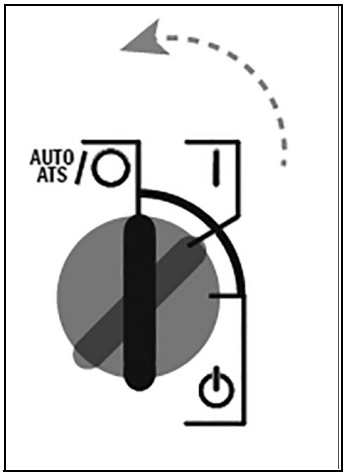

5. To stop the generator in an emergency simply push in the 'EMERGENCY STOP' button.



MAINTENANCE

Some adjustments will need to be made periodically to properly maintain the generator. All service and adjustments should be made at least once every year. It is important that the maintenance chart below is followed:

Item	**Action**	**Frequency**			
		Each Time of Use	Every 1 Month or 20 Hrs	Every 6 Months or 100 Hrs	Every Year or 300 Hrs
Engine Oil (Page 18)	Check Level	*			
	Replace		**	*	
Engine Oil Filter (Page 19)	Clean			*	
Air Filter (Page 20)	Check		*		
	Clean			***	
	Replace				*
Fuel Tank	Clean				****
Fuel Filter (page 22)	Check - Clean			*	
Fuel Supply Line	Check	Every Two Years (Replace if Necessary)			

- ** = Replace after first 20 hours of use.
- *** = Recommended to be performed more often than in the schedule if operated in a dusty environment.
- **** = Recommended to be performed by a CLARKE authorized dealer.

CHANGING THE ENGINE OIL

CAUTION: PROLONGED EXPOSURE TO USED ENGINE OIL IS HARMFUL, ALWAYS WASH YOUR HANDS THOROUGHLY AFTER HANDLING USED ENGINE OIL.

1. Unscrew and remove the oil filler cap/dipstick.
2. Place an oil collection tray under the drain plug.

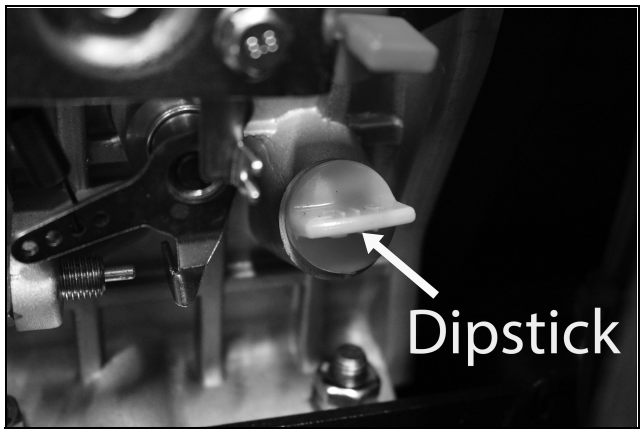

3. Unscrew the drain plug and allow the used engine oil to drain from the crankcase into the oil collection tray.

   NOTE: Drain the engine oil when the engine is warm, this will ensure the oil flows out faster.

4. Replace the drain plug.

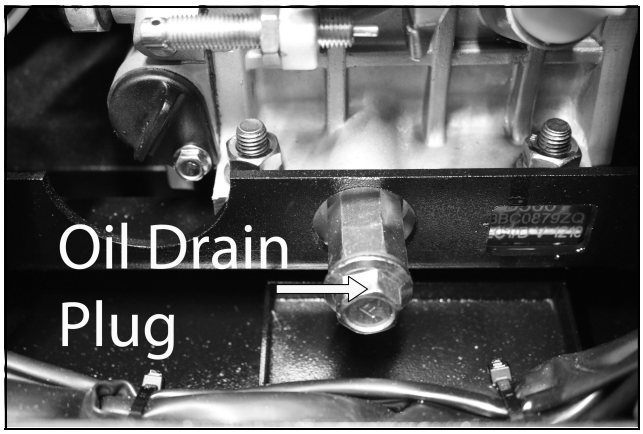

5. Using a funnel, add oil to the crankcase.
   - Fill until the oil reaches the threads in the oil fill tube.
   - Oil capacity: 1.75 litre.
   - We recommend the use of the following oil: CLARKE SAE15W-40 Motor Oil
6. Replace the oil filler cap/dipstick.

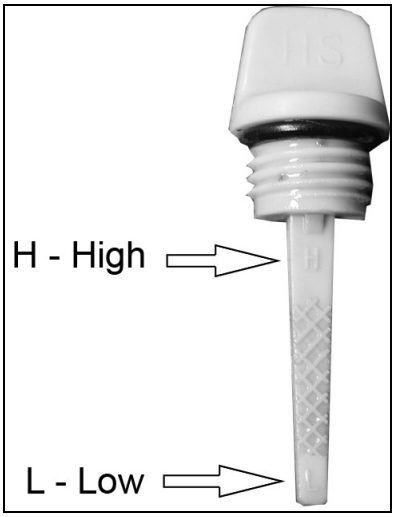

ENVIRONMENTAL PROTECTION

One of the most damaging sources of pollution is oil, **DO NOT** throw away used engine oil in with your domestic rubbish or pour it down drains or sinks. Place it in a leak proof container and take it to your local waste disposal site.

CHECKING/CLEANING THE OIL FILTER

1. Locate the oil filter in the lower half of the engine bay.

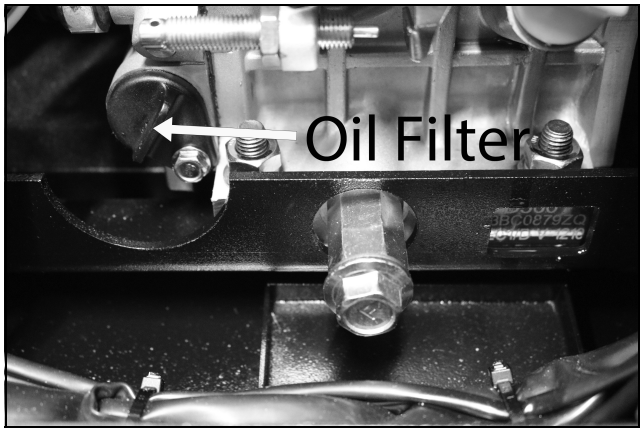

2. Unscrew and remove the retaining bolt.

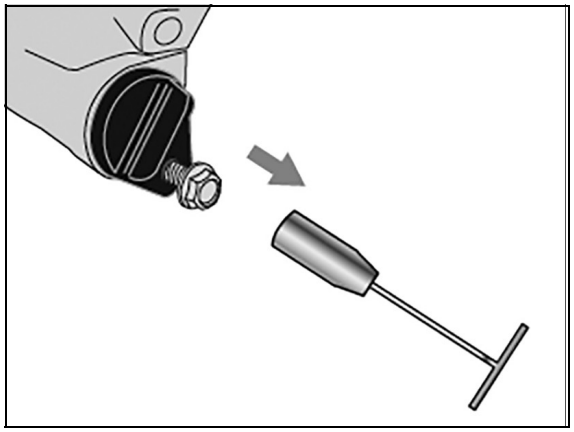

3. Using pliers, remove the oil filter.

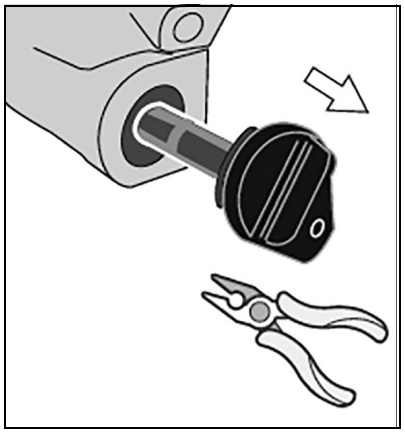

4. Clean the filer using a small amount of diesel and a brush.

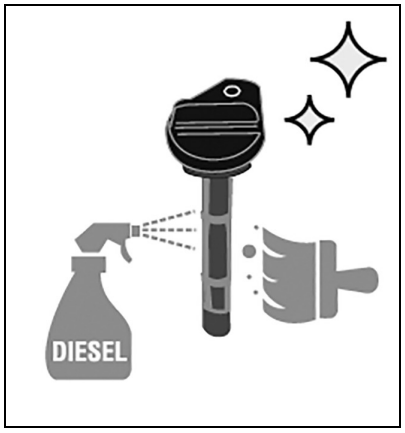

5. Replace the oil filter and retaining bolt.

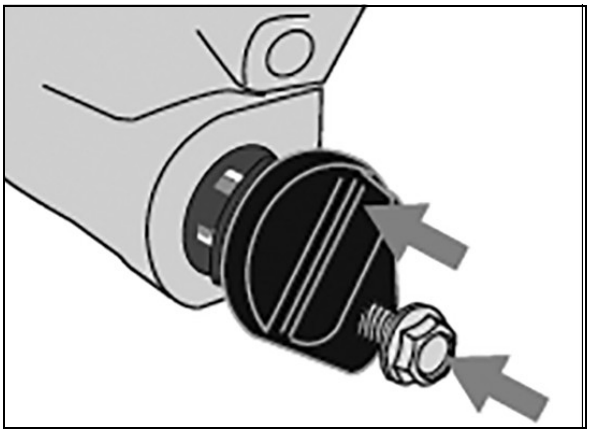

CHECKING/CLEANING THE AIR FILTER

CAUTION: DO NOT USE THE GENERATOR WITHOUT THE AIR FILTER FITTED, THIS CAN DAMAGE THE GENERATOR.

1. Unclip and lift the air filter cover/service panel.

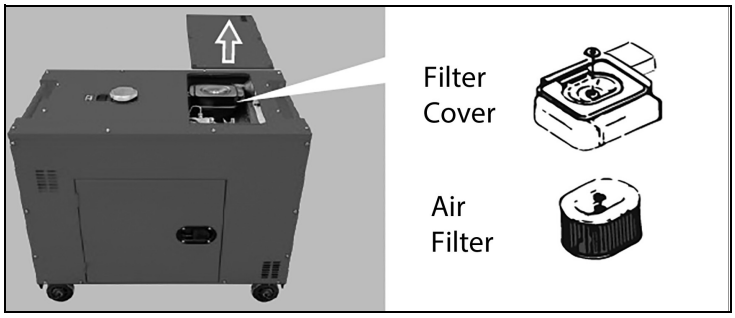

2. Remove the air filter element.
3. Make sure that the air filter is clean and not damaged.
   - If the air filter is damaged contact CLARKE spare parts department for a replacement.
   - If the filter is dirty, vacuum the filter, making sure not to damage it.

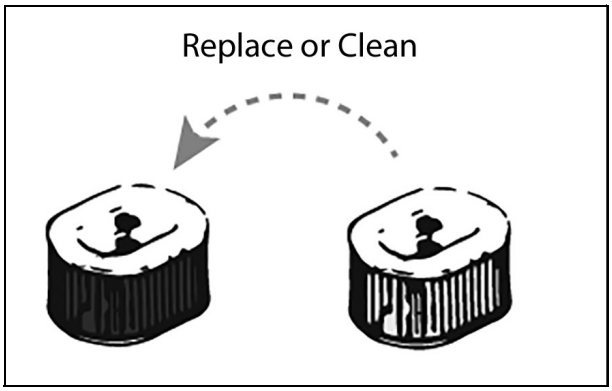

WARNING: DO NOT USE FLAMMABLE SOLVENTS OR PETROL TO CLEAN THE AIR FILTER.

4. Replace the filter to its original position and replace the air filter cover/service panel.

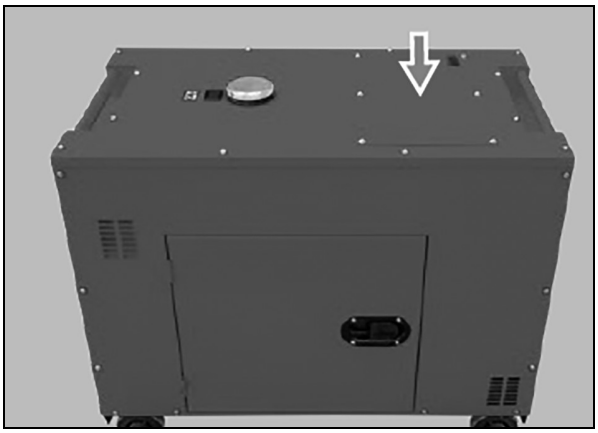

CLEANING/DRAINING THE FUEL LINE FILTER

CAUTION: ALWAYS CARRY THIS PROCEDURE OUT IN A WELL VENTILATED AREA AND AWAY FROM ANY NAKED FLAME.

NOTE: Before proceeding with this process, make sure the fuel tank is empty

1. Locate the fuel filter the top half of the engine bay.

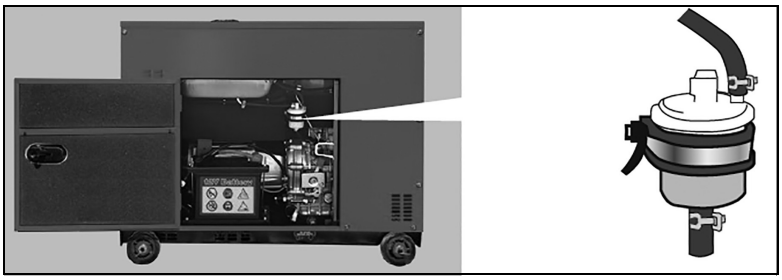

2. Using pliers, disconnect the 3 fuel supply lines by pinching the tube clip and pulling the supply line off the fuel valve.
3. Loosen the support collar and take the fuel filter out.
4. Clean or replace the fuel filter.

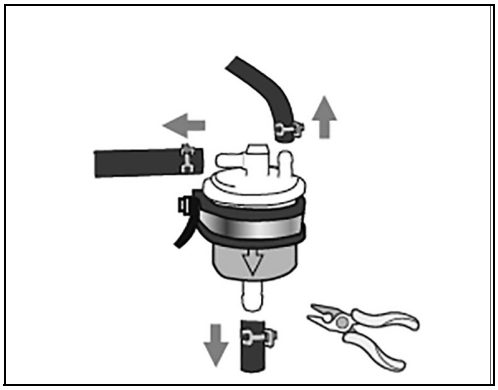

5. Place the fuel filter back in the support collar and tighten.

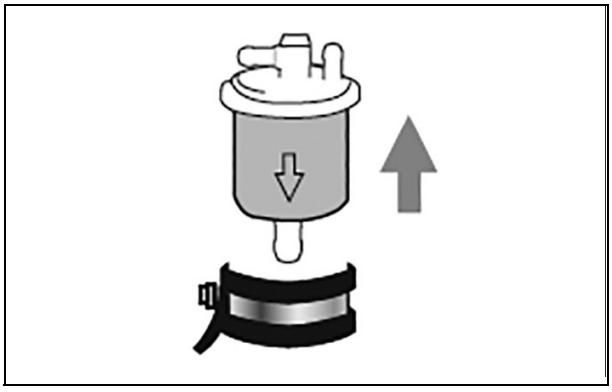

6. Using pliers, reconnect the 3 fuel supply lines.

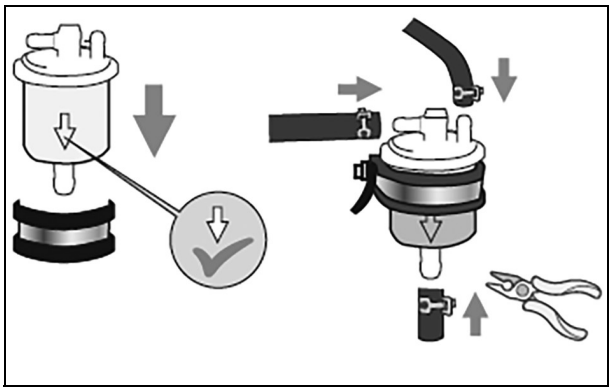

CLEAN FUEL TANK FILTER

Just inside the fuel tank is a fuel filter. Check this filter periodically and remove any contaminants which may have accumulated.

1. Remove the fuel tank cap.
2. Lift out the filter inside.

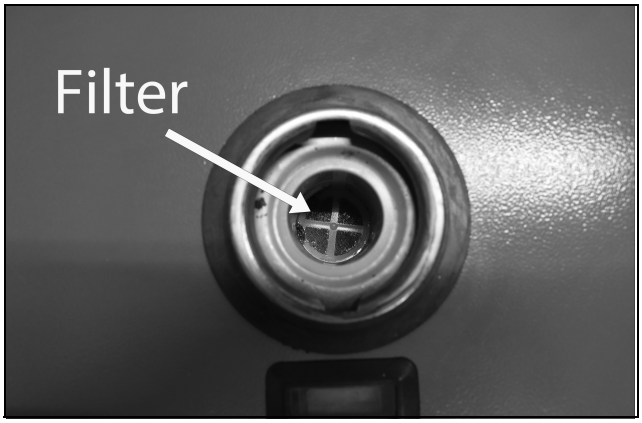

3. Clean the filter with solvent. If the filter is damaged, contact CLARKE Spare Parts department 020 8988 7400 for a replacement.
4. Replace the filter and fuel tank cap.



TROUBLESHOOTING

PROBLEM	CAUSE	SOLUTION
The generator fails to start	Ignition switch is off	Set the ignition switch to 'on'
	Not enough oil in the generator	Add more oil, see page 9-10
	No fuel	Add more fuel, see page 10-11
	Battery level low	Charge battery
The generator fails to generate electricity	The device you are trying to power is faulty	Make sure the device you want to power is working properly
	The AC breaker is switched off	Switch the AC breaker on
The generator is difficult to start	The air filter is dirty	Clean the air filter, see page 20

If this does not solve your problem, please contact the CLARKE service department.

MAINTENANCE RECORD

ENGINE OIL

OIL FILTER

AIR FILTER

FUEL FILTER

BI-ANNUAL SERVICE

DECLARATION OF CONFORMITY - UKCA

UK CA

Clarke® INTERNATIONAL

DECLARATION OF CONFORMITY

This is an important document and should be retained.

We hereby declare that this product(s) complies with the following legislation:		**The following standards have been applied to the product(s):**
2000/14/EC	*Outdoor Noise Directive*	*EN 55012:2007+A1:2009, EN ISO 8528-10:2022, IEC 62321-7-1:2015, IEC 62321-7-2:2017,*
2023/1542	*Battery Regulation*	*IEC 62321-4:2013/AMD1:2017, IEC 62321-3-1:2013, IEC 62321-5:2013, IEC 62321-6:2015,*
2014/30/EU	*Electromagnetic Compatibility Directive*	*EN ISO 8528-13:2016, IEC 62321-8:2017, EN ISO 3744:2010*
2006/42/EC	*Machinery Directive*	
2016/1628	*Particulate Emission and Type-Approval for Non-Road Mobile Machinery*	
2011/65/EU	*Restriction of Hazardous Substances (RoHS) Directive*	

The technical documentation required to demonstrate that the product(s) meet(s) the requirement(s) of the aforementioned legislation has been compiled and is available for inspection by the relevant enforcement authorities.

The UKCA mark was first applied in: 2025

Manufacturer:	Clarke International Ltd, Hemnall Street, Epping, Essex, CM16 4LG, United Kingdom	**Notified Body:**	VERICERT SRL (ID Number: 1878), Via L. Masotti 5, 48124 Fornace Zarattini, Ravenna (RA), Italy
Product Description:	Generator	**Assessment Procedure:**	Annex VI of above noise legislation
Model Number(s):	DG8000ADVES	**Measured LWA:**	94 dB
Serial/Batch Number:	Refer to product/packaging label	**Guaranteed LWA:**	97 dB
Document Holder:	Alan Pond	**Signed:**	**J.A Clarke**
Date of Issue:	26/11/2025		**Director**

Parts & Service: 020 8988 7400 / E-mail: Parts@clarkeinternational.com or Service@clarkeinternational.com

DECLARATION OF CONFORMITY - CE

CE

Clarke® INTERNATIONAL

DECLARATION OF CONFORMITY

This is an important document and should be retained.

We hereby declare that this product(s) complies with the following legislation:		**The following standards have been applied to the product(s):**
2000/14/EC	*Outdoor Noise Directive*	*EN 55012:2007+A1:2009, EN ISO 8528-10:2022, IEC 62321-7-1:2015, IEC 62321-7-2:2017,*
2023/1542	*Battery Regulation*	*IEC 62321-4:2013/AMD1:2017, IEC 62321-3-1:2013, IEC 62321-5:2013, IEC 62321-6:2015,*
2014/30/EU	*Electromagnetic Compatibility Directive*	*EN ISO 8528-13:2016, IEC 62321-8:2017, EN ISO 3744:2010*
2006/42/EC	*Machinery Directive*	
2016/1628	*Particulate Emission and Type-Approval for Non-Road Mobile Machinery*	
2011/65/EU	*Restriction of Hazardous Substances (RoHS) Directive*	

The technical documentation required to demonstrate that the product(s) meet(s) the requirement(s) of the aforementioned legislation has been compiled and is available for inspection by the relevant enforcement authorities.

The CE mark was first applied in: 2025

Manufacturer:	Clarke International Ltd, Fitzwilliam Hall, Fitzwilliam Place, Dublin 2, Republic of Ireland	**Notified Body:**	VERICERT SRL (ID Number: 1878), Via L. Masotti 5, 48124 Fornace Zarattini, Ravenna (RA), Italy
Product Description:	Generator	**Assessment Procedure:**	Annex VI of above noise legislation
Model Number(s):	DG8000ADVES	**Measured LWA:**	94 dB
Serial/Batch Number:	Refer to product/packaging label	**Guaranteed LWA:**	97 dB
Document Holder:	Alan Pond	**Signed:**	**J.A Clarke**
Date of Issue:	26/11/2025		**Director**

Parts & Service: 020 8988 7400 / E-mail: Parts@clarkeinternational.com or Service@clarkeinternational.com

ASSOCIATED CLARKE PRODUCTS

400V Connecting Lead- DCL16A-B	Generator Plug - GP32/2
	
• Three Phase, 16A Plug and Socket. • 2.5m Length • Part No. 3220848	• 32A, 230V Generator Plug • 0.21kg Weight • Part No. 6160730

6” Plastic Filler Funnel- CHT516	20 Litre Fuel Can - JC20LG
	
• Side handle for secure grip. • 0.12kg Weight • Part No. 1801516	• 0.9mm Steel • 4.29kg Weight • Part No. 7649900

A SELECTION FROM THE VAST RANGE OF



Clarke®



QUALITY PRODUCTS

AIR COMPRESSORS
From DIY to industrial, Plus air tools, spray guns and accessories.

GENERATORS
Prime duty or emergency standby for business, home and leisure.

POWER WASHERS
Hot and cold, electric and engine driven - we have what you need

WELDERS
Mig, Arc, Tig and Spot.
From DIY to auto/industrial.

METALWORKING
Drills, grinders and saws for DIY and professional use.

WOODWORKING
Saws, sanders, lathes, mortisers and dust extraction.

HYDRAULICS
Cranes, body repair kits, transmission jacks for all types of workshop use.

WATER PUMPS
Submersible, electric and engine driven for DIY, agriculture and industry.

POWER TOOLS
Angle grinders, cordless drill sets, saws and sanders.

STARTERS/CHARGERS
All sizes for car and commercial use.









PARTS & SERVICE:
0208 988 7400

Parts Enquiries
Parts@clarkeinternational.com

Servicing & Technical Enquiries
Service@clarkeinternational.com

SALES: UK 01992 565333 or Export 00 44 (0)1992 565335

Clarke® INTERNATIONAL Hemnall Street, Epping, Essex CM16 4LG
www.clarkeinternational.com